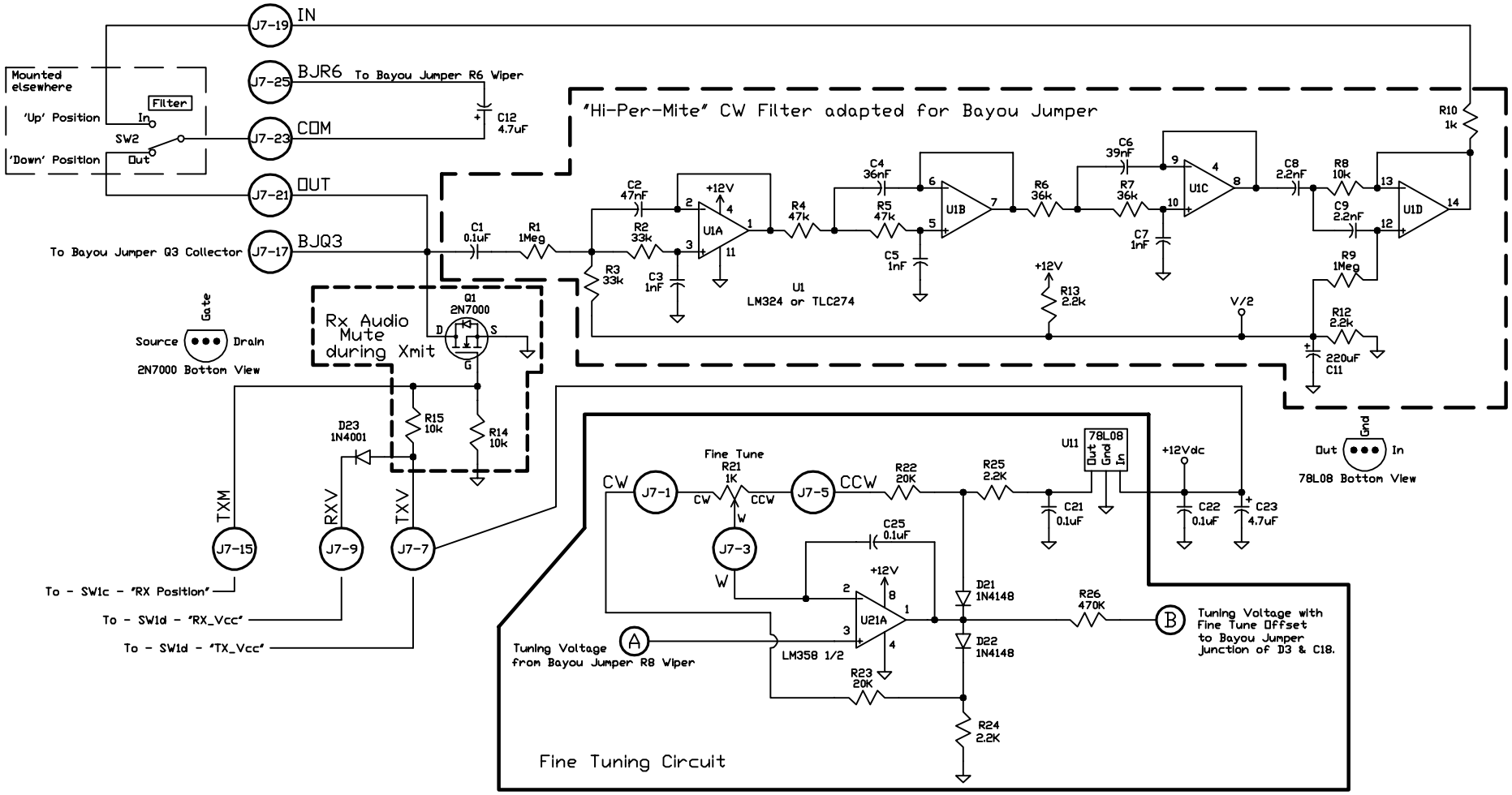

Soup'er Up'er - ver 1.43

for the Four State QRP Group Bayou Jumper

David Martin - NA1MH
May 2017

"Hi-Per-Mite" CW Filter Circuit by David Cripe - NM0S